EZ ELECTRIC POWER STEERING

INSTALLATION INSTRUCTIONS

Volvo P1800S, P1800E, 1800ES

Contents

The Product

Thank you for choosing an EZ ELECTRIC POWER STEERING system for its quality, certification and easy assembly. Since 2006 we produce complete steering columns with integrated power steering. All columns are tailor-made for each type of car and we already have 200 types in stock! For more information about our products (power steering systems and replica steering wheels) or to place an order, please visit our website www.ezpowersteering.nl or send an e-mail to info@ezpowersteering.nl. If you have any questions about the installation, please contact us at workshop@ezpowersteering.nl.

Version ***C1.2***
Date ***02-02-22***

This manual should be read carefully to avoid errors. Check whether all parts of the set are present. This can be done on the basis of the picture in this manual.

Before installation, compare the EZ POWER STEERING column with the original column. Check that the dimensions are the same. Also fit the steering wheel to the column.

If you do not have the skills or tools to perform the installation, have it performed by a professional. EZ POWER STEERING cannot be held liable for incorrect installation or self-inflicted damage.

The manuals are generally based on a left-hand-drive vehicle. In most cases, the right-hand drive version is the mirror image of the installation of a left-hand drive vehicle.

If you think that any changes are needed in this manual, we would like to receive your pictures and comments. With your feedback we can improve our manuals!

Contents of the set

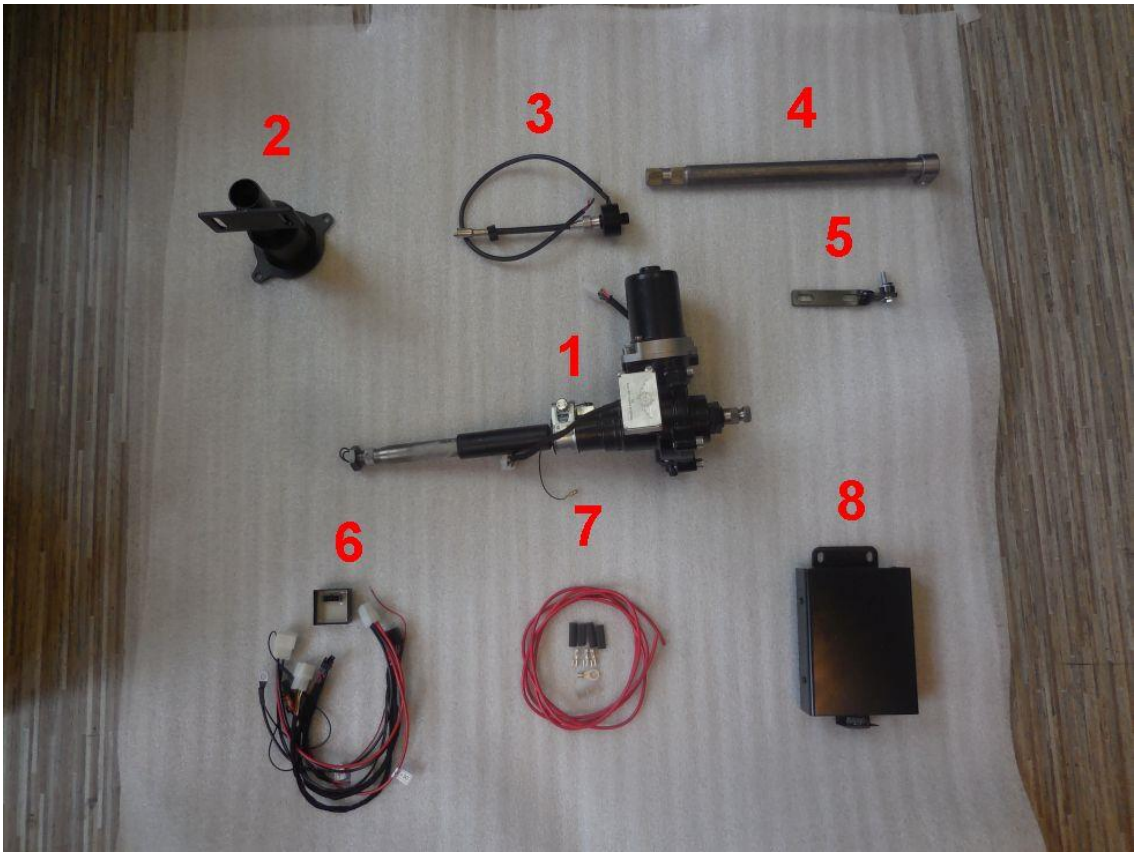

1 EZ unit

2 output tube

3 speed sensor

4 output shaft

5 mounting bracket

6 wiring kit

7 supply cable

8 ECU

Before and after assembly

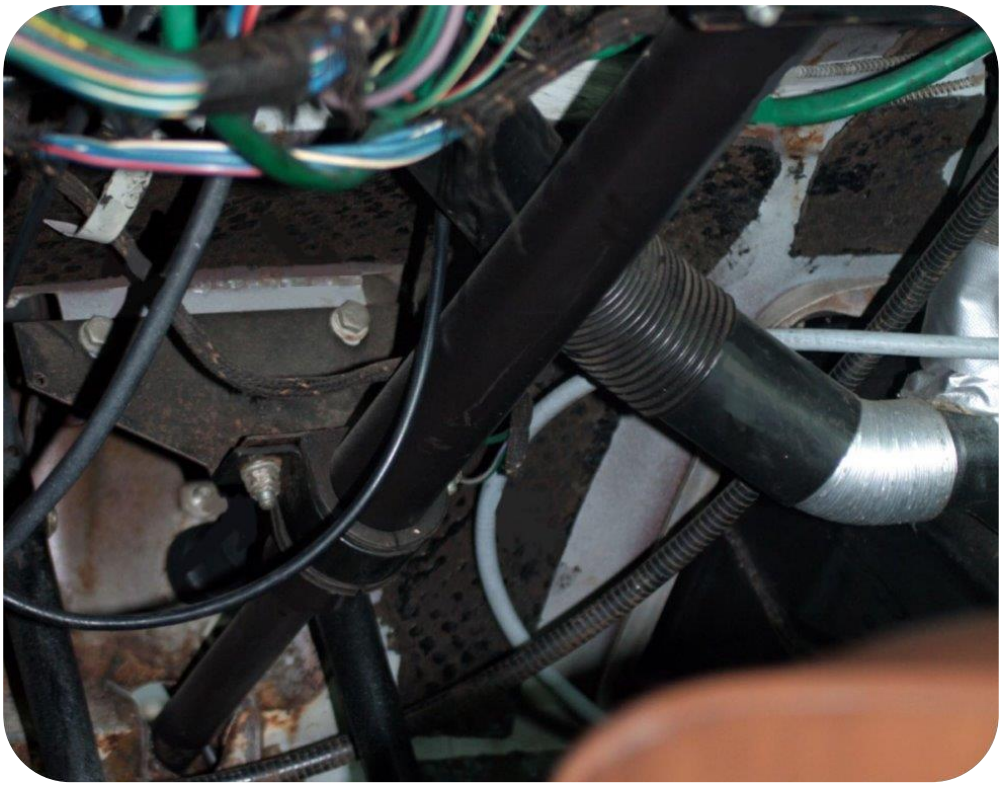

Installation

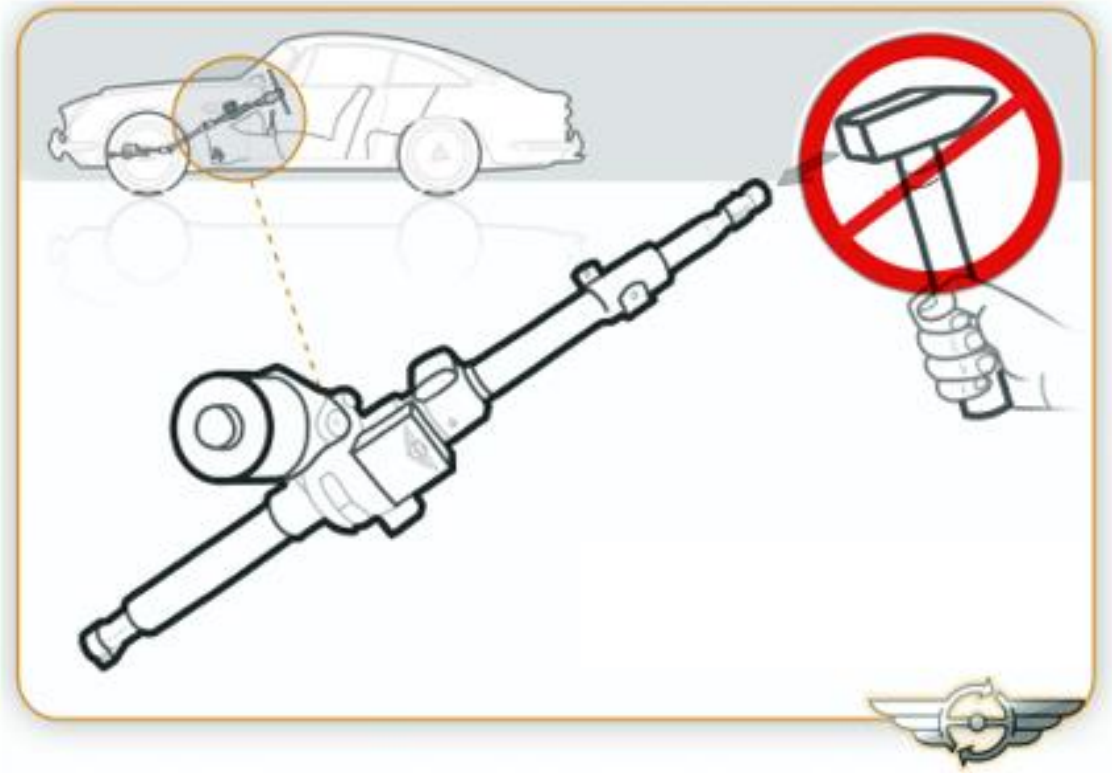

Never hit the input shaft with an object during or after installation. This can negatively affect the sensors.

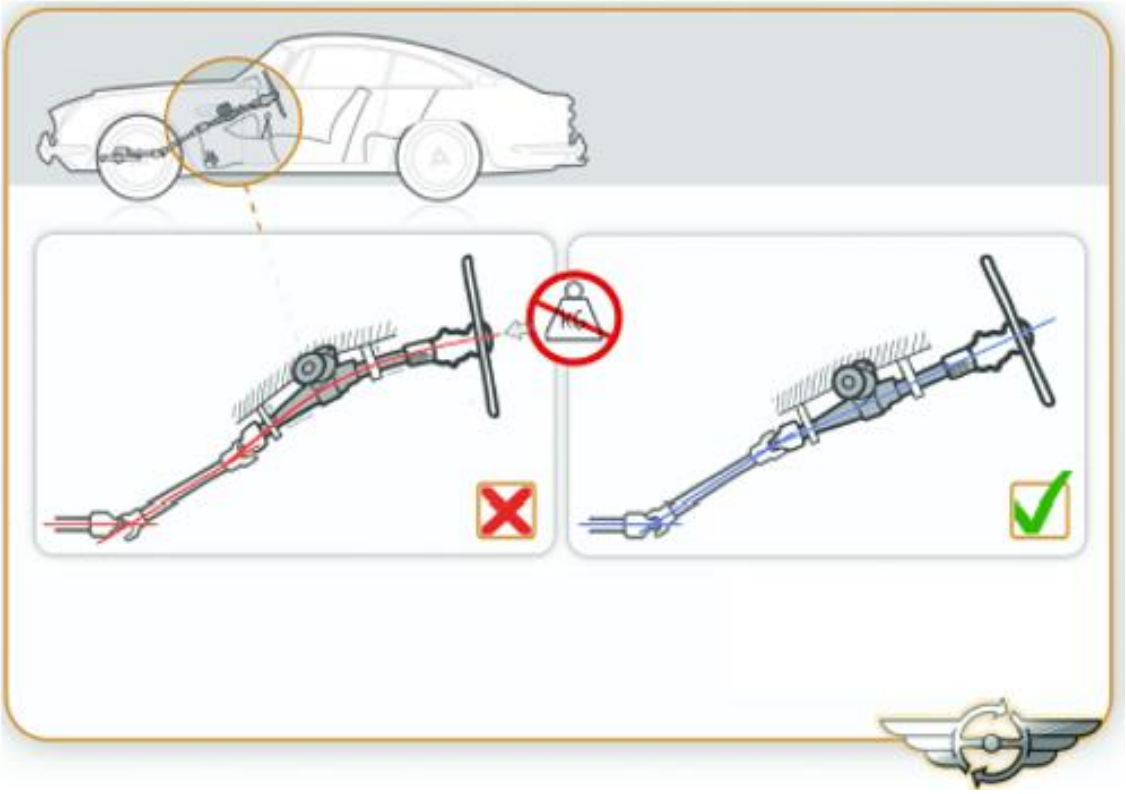

The steering system must always be fitted tension free and properly aligned.

Check length, diameter and splines

Compare the EZ Power Steering Column (EZ-unit) with the original steering column before installing it. Check if the splines on the top and bottom, the diameter of the steering tube and the length of the column are all the same as the original steering column. When in doubt you can use the original steering wheel to check the top splines for fit. Never hammer on the steering shaft of the EZ unit!

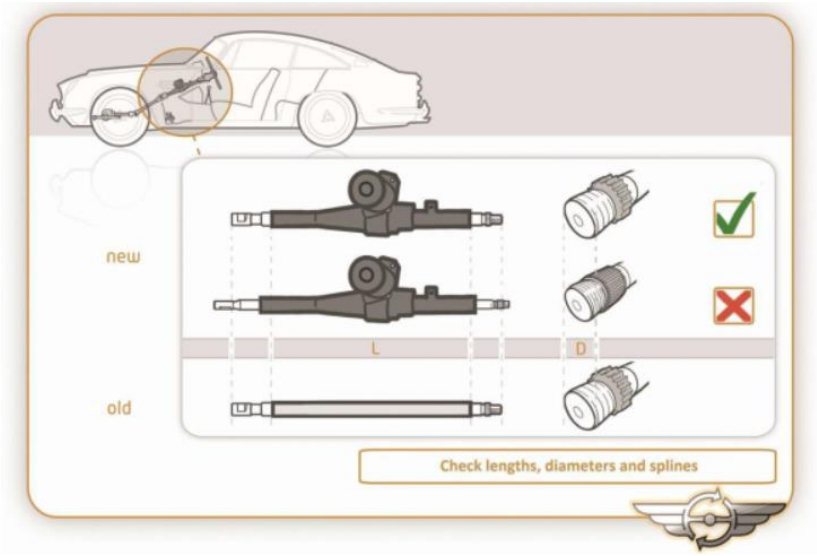

In the car industry its common to have some small tolerances in spline connections. In very exceptional cases connecting a new shaft from the EZ-unit in the original (old) U-joint could cause a tight fitting. This is sometimes relatively easy to solve by sanding only about 0,2mm (0,007 inch) in the inner part of the U-joint and also the spline on the output shaft on the EZ-unit.

Torque tightening values in Nm.

When the new steering column is being fitted hand tighten all the bolts and check if everything turns smoothly before tightening to required Torque, use torque tightening table below:

	Alu	8.8	10.9	12.9
M6	6	11	16	19
M8	15	27	40	47

The system works with a torsion bar into the unit, this measures the amount of torque/load on the steering shaft while steering, the torque sensor measures this and sends a voltage to the ECU. The ECU uses this signal together with the speed signal to control the electric motor from the EZ-unit

Voltage

The basic EZ-unit, is a 12V system with negative earth! There are extra wiring sets available, so that the kit will work with a 6V or 24V system and/or positive earth. Check your vehicle setup before fitting the EZ-unit.

Step 1.

Inspect the tyre pressure and test drive the car. Check that the steering wheel self-centers. Exeman that the steering and instruments are not defective. If everything this is in order, proceed with the conversion.

Step 2.

Find a power supply switched via the ignition. This is necessary for the power supply of the EZ powersteering unit (see step23). The switched power supply can either be taken from the ignition switch or from the fuse box. Then disconnect the battery negative terminal lead.

Step 3.

Remove the horn cap from the steering wheel. Loosen the steering wheel nut and take off the steering wheel. Use a steering wheel puller if necessary. On the steering shaft (as seen from the steering wheel) there is an indicator stop (1), a washer (2), a spring (3) and a spring seat shim (4). Dismantle these. In the engine compartment, pull the horn wire completely out of the steering box. (See step 20).

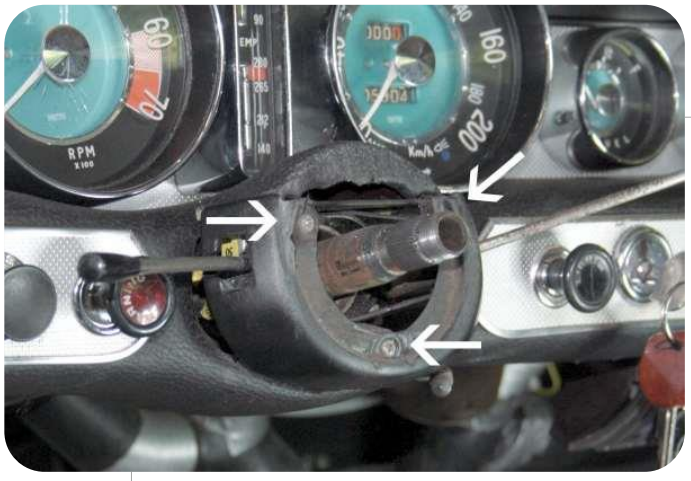

Step 4.

Remove the cover directly behind the steering wheel. It is attached with three screws.

Step 5.

Measure the projection of the steering shaft in relation to the steering tube. Make a note of this measurement. This is necessary to determine the correct length of the front part of the steering tube later.

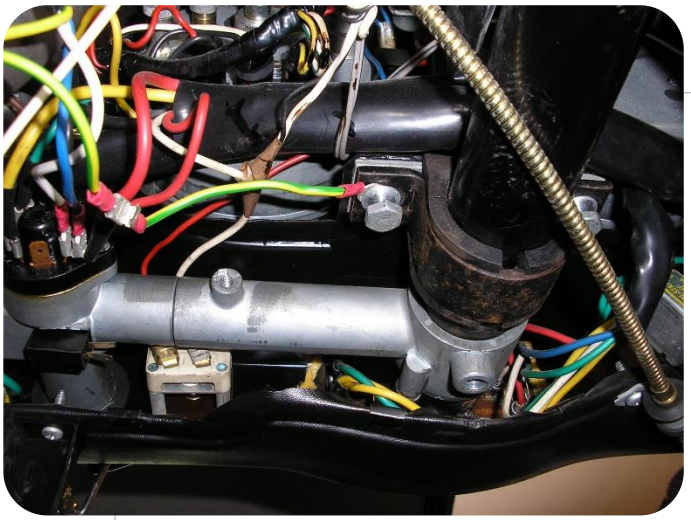

Step 6.

If present, remove the steering lock shear bolt To avoid damaging the steering lock, it is advisable to turn the ignition key to the on position.

TIP: For disassembly, use a small chisel to remove it more easily. To install this bolt, make a cut or replace it with a suitable socket head bolt.

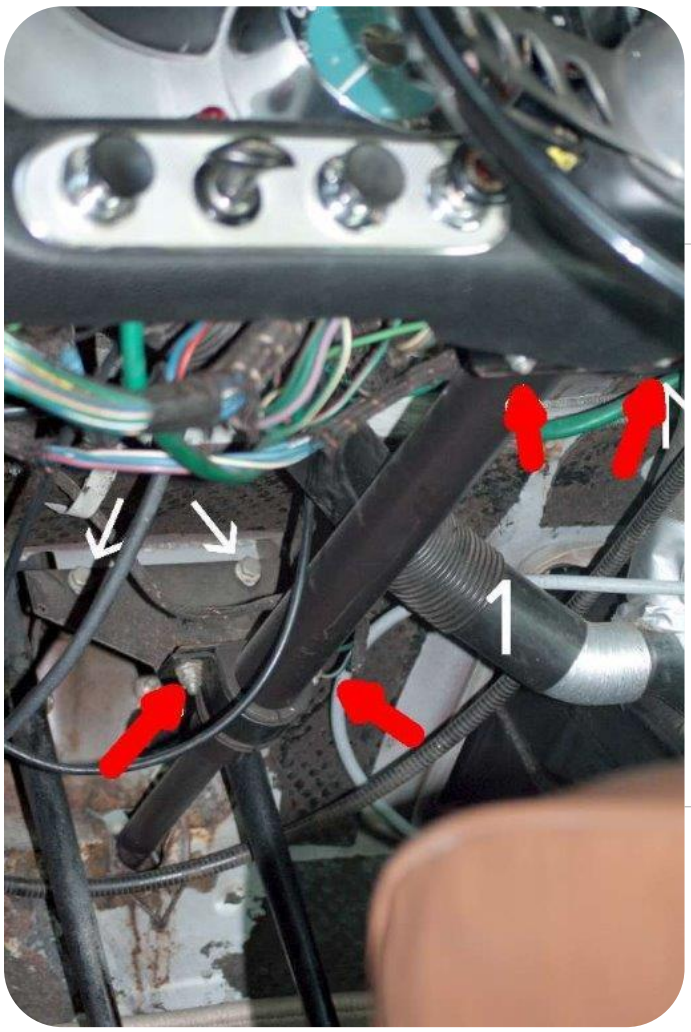

Step 7.

Remove the fixing bolts of the upper bracket of the steering tube and dismantle the bracket, the rubber and the fitting plate. Dismantle the 2 fixing bolts of the lower bracket of the steering tube and dismantle the bracket.

Step 8.

Now the steering tube can be slid upwards a little so that there is room to remove both steering switches. To be able to slide the tube, the steering lock must be unlocked with the key.

Step 9.

Remove the fixing bolt of the steering shaft coupling in the engine compartment (it is under the master cylinder).

Step 10.

Dismantle the steering shaft and steering tube simultaneously. Hang the switches aside.

TIP: Put the steering wheel back temporarily in order to be able to pull the axle out of the steering shaft coupling more easily. Shaft and steering tube must be dismantled at the same time! If necessary, use WD-40® or a similar product.

Step 11.

The original mounting bracket must be modified. Remove part of the raised lip from the mounting bracket. The aim is that the lip still blocks the input tube of the EZ unit, but is not too deep into the tube so that it might touch and damage the input shaft.

Tip! Before fitting the EZ-unit use the available free space to fit the speed sensor. Remove the speedometer cable and screw the speed sensor to t e speedometer. Refit the speedometer cable to the speeds sensor. Ensure the cable does not make any sharp bends and does not interfere with the wiper mechanism under the dashboard.

Step 12.

Remove the clamp from the output shaft of the EZ unit. This is secured with a torx m8 bolt.

Mount the output shaft in the car, it can be slid into the original splined joint. Do not tighten it yet. Use some lubricant on the splines of the output shaft before mounting.

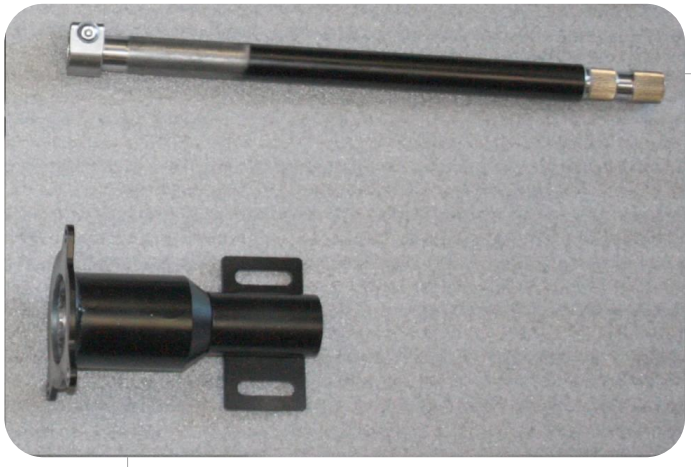

Step 13.

Now slide the output tube over the output shaft. Then place the clamp back on the output shaft.

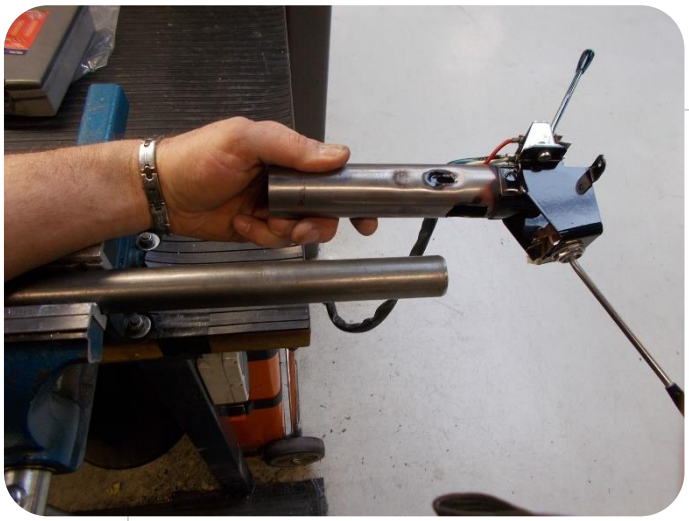

Step 14.

The front part of the original steering tube is reused on the EZ unit. Take the measurement from point 5 to determine the length of the steering tube and mark it on the original steering tube. The tube must not touch the spring loaded horn contact on the EZ unit! Determine the correct length and cut off the front part of the original steering tube. This will be approximately 240mm.

Step 15.

Mount the EZ unit in the car, first insert the input shaft from below through the hole in the dashboard. Note, if there is a steering lock, put the shaft through it as well. Turn the input shaft so that the opening of the steering lock points to the right, then mount the output shaft on the EZ unit.

Step 16.

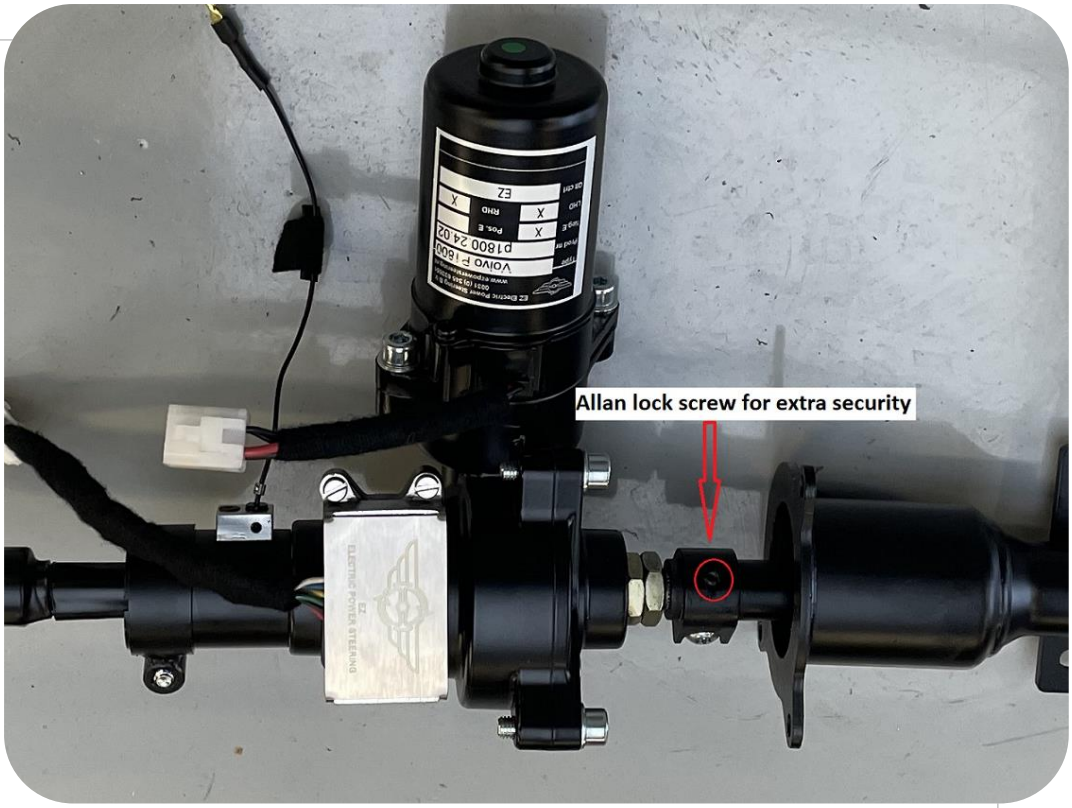

In the output shaft there is a locking screw which must first be loosened several turns before you can slide the shaft onto the motor.

After this, the Allen screw must be tightened flush after which the output tube can be mounted on the motor.

Tighten the output shaft clamp to 35Nm with a torque wrench. Fit the output tube to the EZ unit with the three bolts. Mount the bolts of the lower mounting bracket, but do not tighten these bolts yet.

Step 17.

Slide the previously cut off original steering tube over the input shaft and install the steering tube in the EZ unit. Make sure that the steering lock is unlocked. Now fit the switches back onto the input tube. Also mount the cover with the three screws. Mount the sheer bolt or a new Allen bolt to the steering lock, pay attention to the recess in the input tube for the bolt. Mount the modified original clamp around the tube, note the recess in the tube here as well. (See step 11).

Step 18.

Now slide the input tube as deeply as possible against the dashboard and then tighten the original front clamp. Now set the correct projection with the distance measured earlier. (See step 5) Check this with the steering wheel fitted. The steering wheel should just rotate freely from the cover cap behind the hub. When the projection distance has been set correctly, tighten the lower clamp of the EZ unit. Then secure the upper clamp of the EZ unit around the input tube. Finally, tighten the steering shaft coupling in the engine compartment.

Step 19.

Mount the ECU to the left of the steering column with the bracket provided. Remove the original and mount the ECU in the car with the supplied 5mm longer bolt.

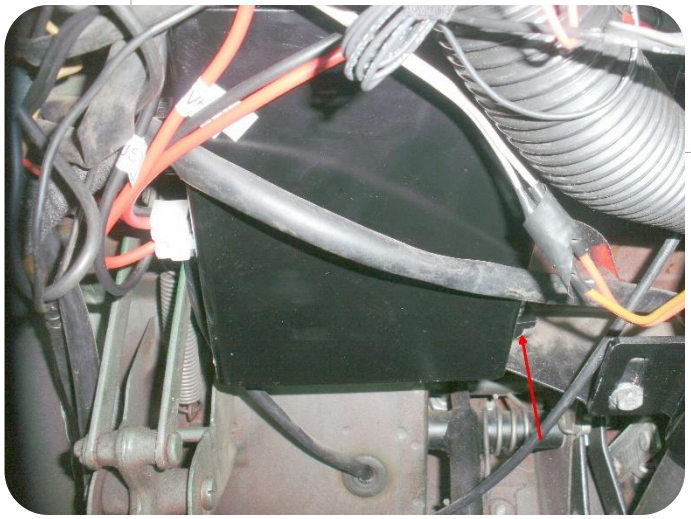

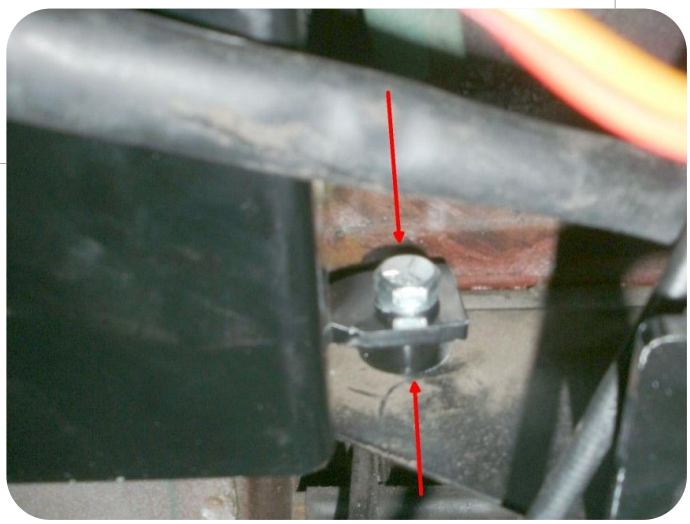

Step 20.

Feed the horn wire previously removed (Step 3) from the steering box through the inner screen and bulkhead back to the EZ unit and connect it to the spring loaded horn contact of the EZ unit.

Step 21.
Connect the EZ wire set to the ECU. Connect the speed sensor

Step 22.
Connect the thick red wire (30+) from the fuse holder directly to the positive battery. It is advisable to extra isolate the wire.

Step 23.
Connect the thin red wire (15+) to an ignition contact switched power supply (see point 2)

Step 24.
Connect the black wire (31-) to a suitable clean ground point.

Step 25.
Connect the previously disconnected battery negative terminal lead. After switching on the ignition a click can be heard from the ECU, the system is now operational, check this by making steering movements. After switching off the ignition a click is heard again after about 3 seconds. The system is now switched off.

Step 26.
Now reassemble the steering wheel of the car. Note the order in which the parts removed in step 3 are replaced. Mount the steering wheel but do not over tighten it. Take a test drive and check all the systems again. Check if the position of the steering wheel is correct, if not adjust it and then tighten the steering wheel nut. Next, connect the horn switch to the horn wire of the EZ unit. Mount the horn switch back on the steering wheel.

Step 27.

The end result.